ITEM NO.:FORDO PE180

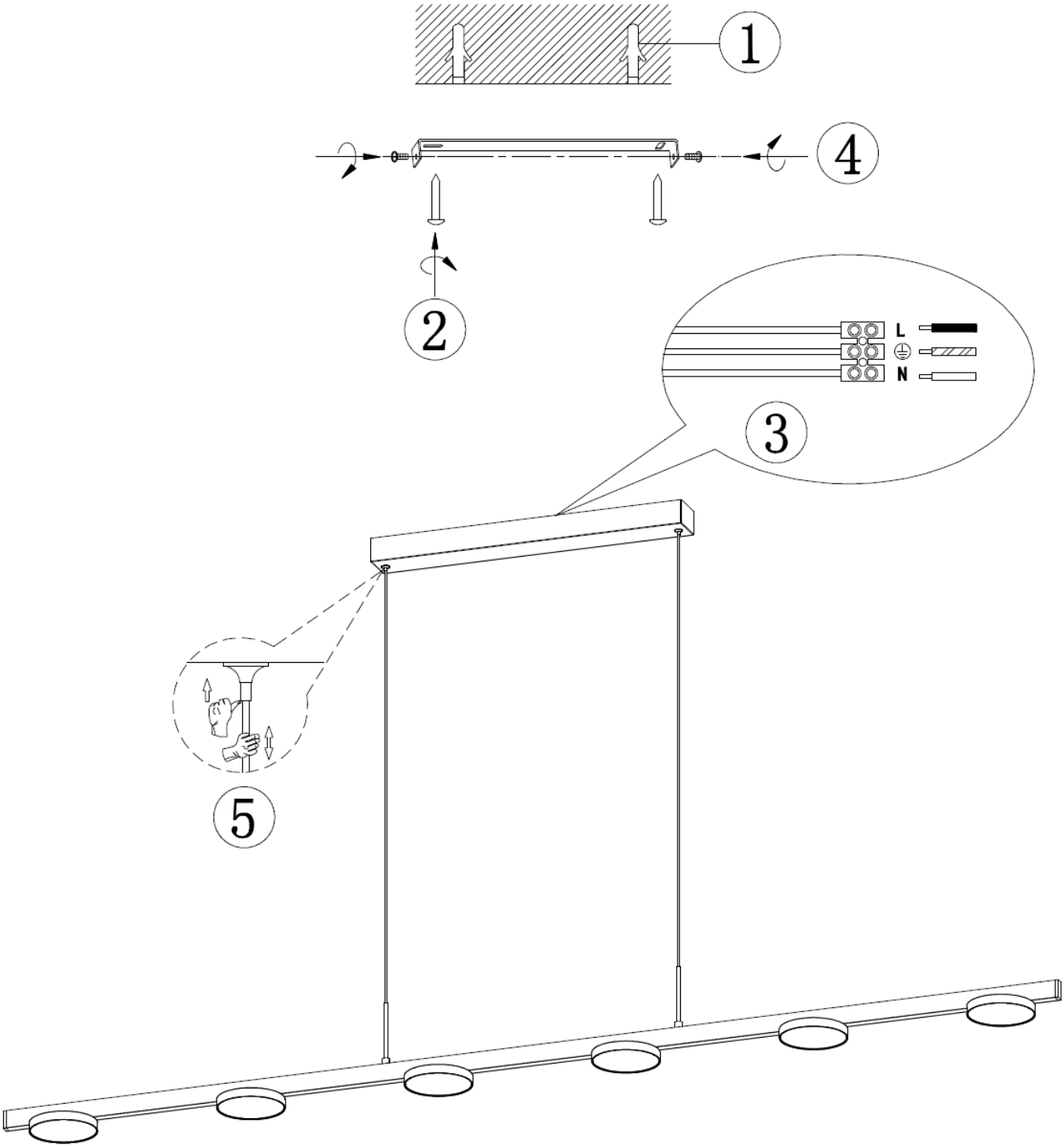

IMPORTANT
Must be installed by a quali÷ed electrical contractor.
Install in accordance with AS/NSZ3000

240V ~ 50Hz LED 30W 3000K

TRAILING EDGE DIMMER